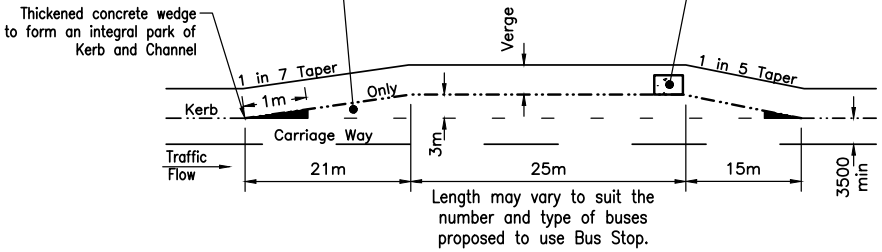

INDENTED BUS BAY – GEOMETRIC LAYOUT

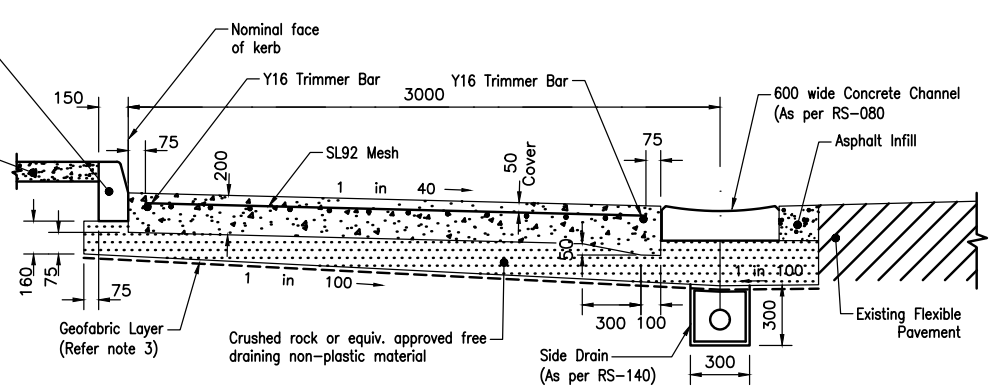

CONNECTION TO EXISTING FLEXIBLE PAVEMENT

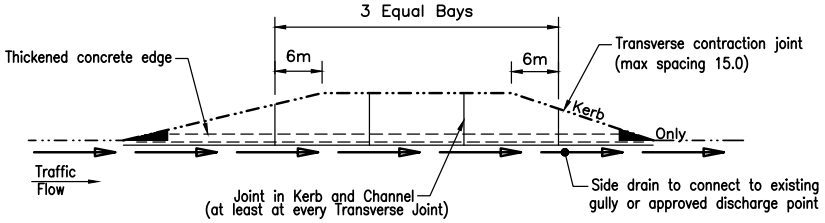

INDENTED BUS BAY – PAVEMENT JOINT LAYOUT

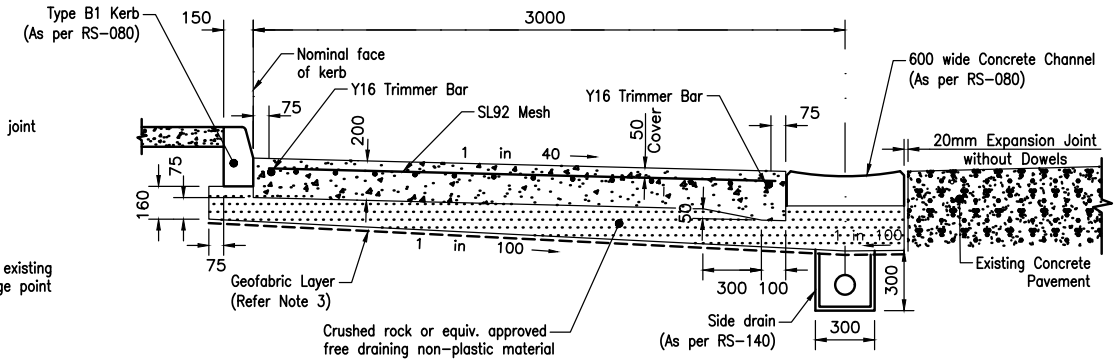

CONNECTION TO EXISTING CONCRETE PAVEMENT

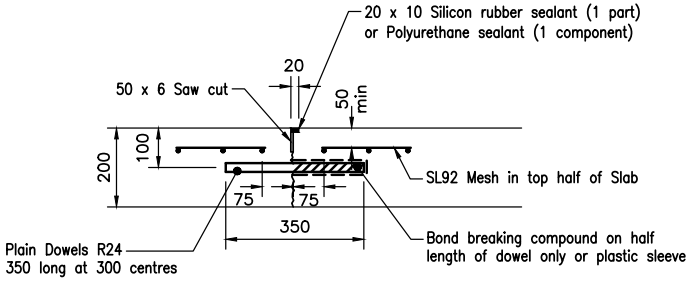

TRANSVERSE CONTRACTION JOINT

NOTES:

1. The specified pavement standard does not apply to poor Subgrade.
2. The pavement design assumes a minimum Subgrade CBR of 5 (soaked 4 days).
3. A Geofabric layer (BIDIM A49 or equivalent) shall be used where the Subgrade CBR is <3.0 and for silty/clayey soils.
4. Bus bay concrete to be grade N32.
5. Concrete to be broom finished and have a maximum aggregate size of 20mm.
6. Reinforcement to comply with AS1303 for plain bars and AS1304 for welded fabric. Lap mesh 400 and tie at 500 spacings.
7. Where a bus bay is constructed adjacent to an existing concrete pavement, the transverse joints in the bus bay shall line up with those in the existing pavement.
8. If a gully is required, it should be located so as to intercept any water before it reaches the Bus Bay.
9. Alternative pavement designs may be considered for approval by the relevant council upon receipt of a formal submission by a RPEQ.
10. All dimensions are in millimetres unless noted otherwise.

These drawings have been developed in consultation between the participating Councils.
BEFORE USE, the user shall confirm that the drawing has been adopted by the appropriate Council.

Rv.	DATE	REVISIONS
B	06/16	Review
A	05/08	ORIGINAL ISSUE

INSTITUTE OF PUBLIC WORKS ENGINEERING AUSTRALASIA

STANDARD DRAWINGS

INDENTED BUS BAY OPTIONS
ADVERSE CROSSFALL

RS-183