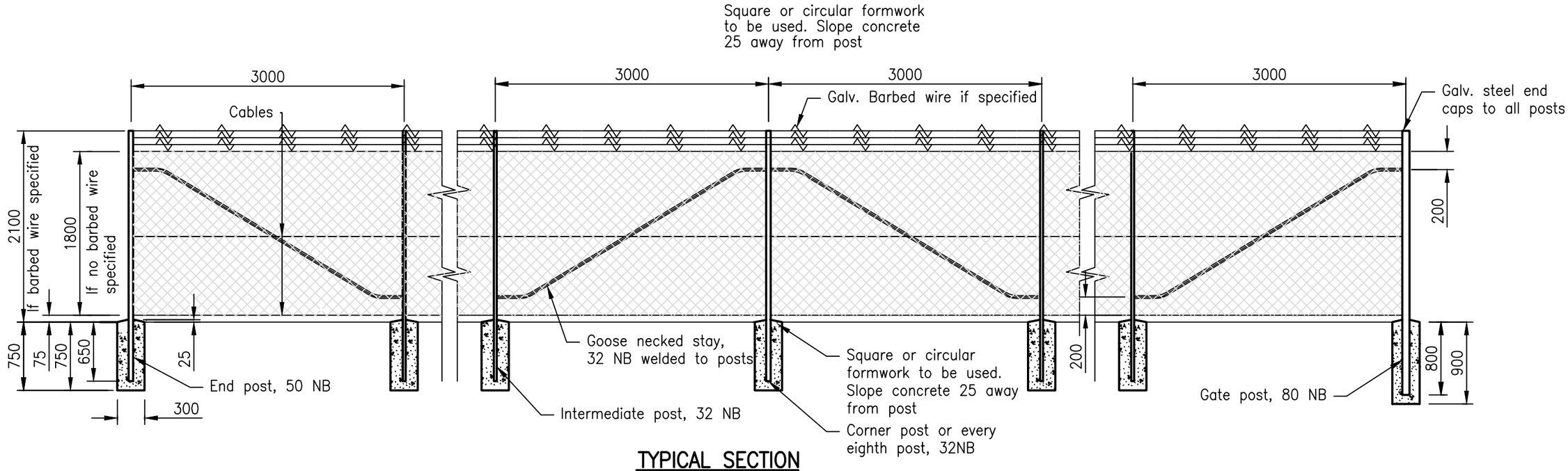

TYPICAL SECTION

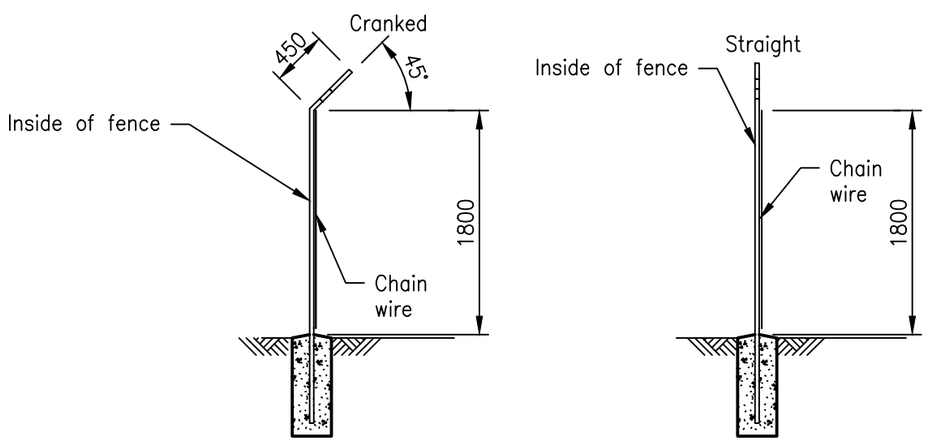

TYPE 1

TYPE 2

BARBED WIRE PROFILES

NOTES:

1. POSTS: Gate posts to be 80 NB (light) galvanised steel tube, to AS 1074.
   Corner, end and every eighth post to be 50 NB (light) galvanised steel tube to AS 1074.
   Intermediate posts and goose necked stays to be 32 NB (light) galvanised steel tube to AS 1074.
   Galvanised steel end caps to be provided to all posts.
   All posts to be vertical.
2. Corner posts to be adopted where the change in angle in horizontal alignment exceeds 20 degrees.
3. Stays to be provided at end posts, gate posts, corner posts and every eighth post.
4. Standard couplings may be used as an alternative to welds. For all connections except goose necked stays which should be welded to posts.
5. All welds to be 5 thick continuous fillet welds to AS 1554 with cold galvanising treatment to completed welds.
6. Cables to be formed from two 3.15mm diameter wires twisted together and installed in accordance with AS 1725.
7. All posts, stays and cables are to be galvanised in accordance with AS 4680.
8. All concrete N25 in accordance with AS 1379 and AS 3600.
9. Chain wire to be 50 x 2.5mm galv. to AS 2423 or plastic coated fixed using 1.6 wire ties as follows :
   Intermediate posts at 3 locations
   End posts at 3 locations
   Horizontal cable at 375 centres to top cable
   Horizontal cable at 600 centres to middle cable
   Horizontal cable at 450 centres to bottom cable.
10. Barbed wire to be 2.5mm galv. if specified to AS 2423.
11. All dimensions are in millimetres unless shown otherwise.

These drawings have been developed in consultation between the participating Councils.
BEFORE USE, the user shall confirm that the drawing has been adopted by the appropriate Council.

Rv.	DATE	REVISIONS
D	06/14	Review
C	03/14	Amended Drawing Number
B	06/11	Review
A	08/09	ORIGINAL ISSUE

INSTITUTE OF PUBLIC WORKS ENGINEERING AUSTRALASIA
STANDARD DRAWINGS

FENCING – CHAIN WIRE SECURITY FENCE

GS–041

D C B A Rv.